Alphacam ID Tool's Manufacture Name

MILL | (example) Gauge/ Calibration Wheel X.xxx Inch | Copy

Tool Parameters

Tool Pocket Number		(XY) Stock To Be Left	NA	in	Serial Number	
Tool Diameter	in	(Z) Stock To Be Left	NA	in	Scan	
Tool Length	in	(Z) Depth Offset	NA	in		

Tool Measure Parameters (in)

R25	R23	R26	R24	R09	R21	R22
	NA	NA	NA	NA	NA	NA

R02: Measured Parameter

○ Diameter ⊗ Length ○ Both

R24: Search Result

○ Smallest Diameter ○ Largest Diameter

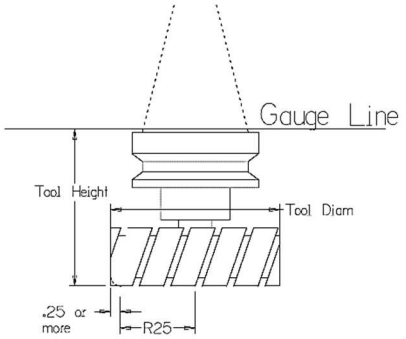

Alphacam ID Tool's Manufacture Name

MILL | (example) Gauge/ Calibration Wheel X.xxx Inch | Copy

Tool Parameters

Tool Pocket Number		(XY) Stock To Be Left	NA	in	Serial Number	
Tool Diameter	in	(Z) Stock To Be Left	NA	in	Scan	
Tool Length	in	(Z) Depth Offset	NA	in		

Tool Measure Parameters (in)

R25	R23	R26	R24	R09	R21	R22
	NA	NA	NA	NA	NA	NA

R02: Measured Parameter

○ Diameter ⊗ Length ○ Both

R24: Search Result

○ Smallest Diameter ○ Largest Diameter

