# Integrated tool management (ITM)
## Set-up Sheet
## Core-Mill-Gauge

Tool Manufacturer Information _____

| Tool Pos | Rack Pos | *RPM | *Feed Rate | *Removal | Default Z Offset | Tool Dia. | Tool Length |
|---|---|---|---|---|---|---|---|
| 1 | | | | NA | | | |

* Information specific to tool manufacturer

| Tool Pos | R25 | R23 | R26 | R24 | R09 | R21 | R22 |
|---|---|---|---|---|---|---|---|
| 1 | | NA | NA | NA | NA | NA | NA |

Search Result= NA

R02=LENGTH

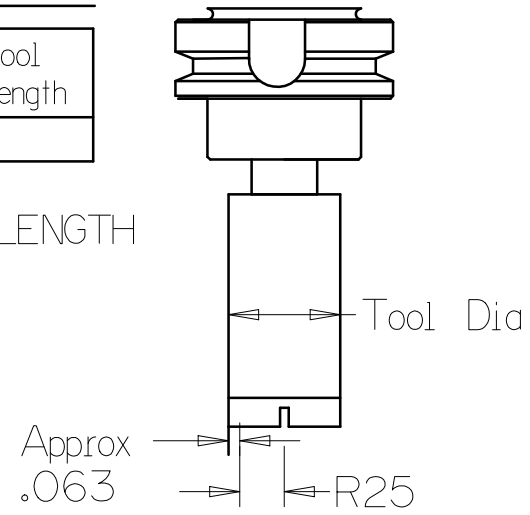


Tool Manufacturer Information _____

| Tool Pos | Rack Pos | *RPM | *Feed Rate | *Removal | Default Z Offset | Tool Dia. | Tool Length |
|---|---|---|---|---|---|---|---|
| 1 | | | | NA | | | |

* Information specific to tool manufacturer

| Tool Pos | R25 | R23 | R26 | R24 | R09 | R21 | R22 |
|---|---|---|---|---|---|---|---|
| 1 | | NA | | | | NA | NA |

Search Result= Largest

R02=BOTH

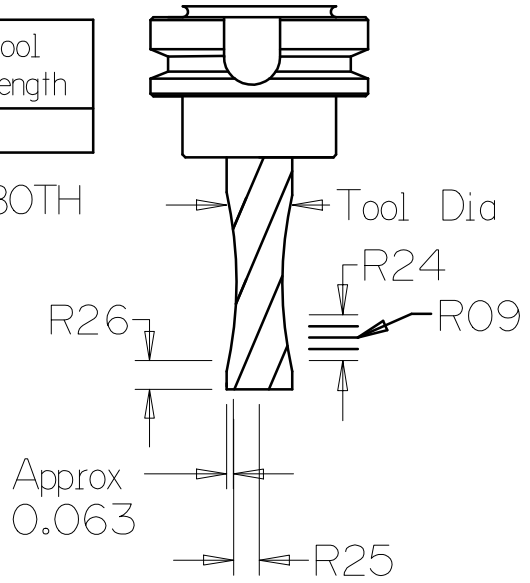


Tool Manufacturer Information _____

| Tool Pos | Rack Pos | *RPM | *Feed Rate | *Removal | Default Z Offset | Tool Dia. | Tool Length |
|---|---|---|---|---|---|---|---|
| 1 | | | | | | | |

* Information specific to tool manufacturer

| Tool Pos | R25 | R23 | R26 | R24 | R09 | R21 | R22 |
|---|---|---|---|---|---|---|---|
| 1 | | NA | NA | NA | NA | NA | NA |

Search Result= NA

R02=LENGTH

